Installation Manual for New standard PV Modules

GCL System Integration Technology Co., Ltd.

Content

1 Overview....01

2 General Rule....01

3 Unloading, Transportation, and Storage....04

3.1 Unloading....04

3.2 Secondary Transportation....05

3.3 Storage....06

4 Location and Angle....07

4.1 Installation Environment....07

4.2 Selection of Tilt Angle....08

5 Mechanical Installation....08

5.1 Installation Mode....10

5.2 Clamp and Clamp Mounting....11

5.2.1 Selection of Clamp and Clamp....11

5.2.2 Installation Process....12

5.2.3 Installation Method....13

Load of Mono-Facial Modules....14

Load of Bifacial Modules....14

5.3 Bolt Mounting....15

Installation of Single-axis Tracking System....16

5.3.1 Installation Process....17

5.3.2 Installation Method....17

Load of Mono-Facial Modules....17

Load of Bifacial Modules....18

6 Electrical Installation....19

6.1 Wiring....21

6.2 Grounding....22

7 Maintenance....24

8 Release and Execution....25

Appendix A: Clamps recommended by GCL SI....26

Revision History....26

1 Overview

Thank you for choosing our products. This manual is only applicable to the solar modules (hereinafter referred to as "modules") of GCL System Integration Technology Co. (hereinafter referred to as "GCL SI") This manual covers the installation methods, operational safety, and maintenance information of GCL SI modules. Before installation, the installer must be familiar with the mechanical and electrical requirements during installation. Failure to follow the installation guidelines in this manual may result in injury or property damage. Please keep this manual in a safe place for future care and maintenance and for reference when selling or disposing of modules.

Modules must be installed by a professional. Please read this manual carefully before installation. The installer must strictly comply with the provisions of the manual, local laws, or the relevant requirements and regulations of authorized agencies. The installer must inform the end customer and the consumer of the above accordingly.

"Module" in this manual refers to one or more high-efficiency solar modules manufactured by GCL SI. Please retain this manual for future reference.

The protection class of the module: Class II (IEC61730:2023); (IEC61730:2016);

The application class of the module: Class A (IEC61730:2004).

Disclaimer

This manual is not a quality warranty, nor does it have any meaning as a quality warranty. GCL SI shall not be liable for any damages related to the installation, operation, utilization, or maintenance of the modules in violation of the requirements of this manual, including module breakdown or damage, or other costs. No patent or patent license shall be obtained by any customer through the use of this module (explicit or implicit). The information in this manual is based on the knowledge and experience of GCL SI and is reliable. However, the product specifications (but not limited to) and related recommendations contained in the text do not constitute any explicit or implicit warranty.

GCL SI reserves the right to modify the modules, specifications, or other information in this manual without notice in advance. For the latest information, please keep an eye on the GCL SI website for updates of relevant information.

2 General Rules

Safety Rules

Before installing, wiring, operating, or maintaining the modules, all relevant personnel should read and understand the safety rules mentioned in this manual. Regardless of whether the module is connected or not, when the module cell surface is exposed to direct sunlight or other light sources, direct current (DC) will be generated, and direct contact with wiring parts of the module, such as terminals, may result in injury or death.

Due to the large size and weight of PV modules, the installation site is complex. Therefore, no matter where, when and under what circumstances, appropriate protective measures should be taken when contacting PV

modules, including but not limited to: protective tools such as safety helmets, safety belts, insulated gloves, insulated tools, and insulated shoes. When the user needs to install, wire, ground, service, clean, etc. the module, please make sure to use the appropriate electrical safety protection tools. Avoid direct contact with modules, which may cause electric shock or cuts.

In order to deepen the attention and understanding of the recommended prohibitions, this manual will use some signs to explain. As shown below, when such signs appear in the manual or on construction sites, etc., they indicate that violation of such signs may cause damage to the product or endanger the personal safety of the user.

Must Wear Protective Gloves	Must Wear a Safety Helmet	Stay Safe	Watch Out for Fire	High Voltage Hazard	Absolute Prohibition

Fire Safety

Avoid open flames or flammable and explosive materials in the vicinity when installing or using modules.

In the case of installing modules on roofs or buildings, please refer to local laws and regulations and comply with building fire safety requirements before installation. The roof should be covered with a layer of fireproof material of appropriate grade and ensure that the module and the mounting surface are fully ventilated before installing the roof module. Different roof structures and installation modes will affect the fireproof performance of buildings. Improper installation may cause a fire. Adopt proper module accessories such as fuses, circuit breakers, and grounding connectors to ensure fire safety in the event of an accidental failure according to local laws and regulations.

Operating Rules

The application class of GCL modules is Class A and can be used in systems with a DC voltage greater than 50V or a capacity of more than 240W. Be sure to ensure that all modules and electrical connectors are clean and dry before installation.

Please use disassembly aids when unpacking the modules. Pay special attention when handling modules. Wear non-slip gloves to handle modules by two people, both double-handed, and do not pile modules up.

	Do not stand, sit, lie down, walk, or jump directly on the package or the modules.
	Do not dismantle or drop the module by yourself. All parts of the module are important and do not remove any nameplate or parts of the module.

	Do not focus sunlight onto modules using mirrors or magnifying glasses, and avoid causing this accident manually or accidentally.
	Do not carry the module by grasping the junction box or wire by hand, otherwise, the broken insulation of the junction box or cable may lead to electric leakage or electric shock.
	Do not place the module package on the ground where there is protruding debris.
	Do not touch the module with any sharp objects, for it may affect the safety of the modules. Do not use the module if you find scratches on the surface glass or back sheet of the module.
	Do not apply direct pressure to the front glass or back sheet of the module, including stacking heavy objects or impact.
	Do not touch the surface of the coated glass with bare hands. Wipe the module surface in time if it is found to be dirty, wipe it in time, otherwise, it will affect normal use.
	Ensure that all electrical contact points and the operating environment are clean and dry. In case of fire, do not use water to extinguish the fire.

Package Indicator Instructions

Please read the unpacking instructions and the outer indicators carefully before operation, and follow the requirements of the indicators.

Do not expose modules to rain or moisture.	The modules in the carton are fragile. They should be handled with care.	The package should be transported upright and upward. 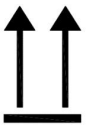
Do not step on the carton and the modules.	Do not exceed the indicated maximum layer limit on the packaging carton when piling modules up (n=2 for a maximum of two layers).	One module should be handled by 2 people at the same time. 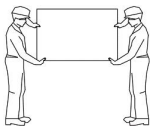

Meaning of Crossed-wheeled Bins

Do not dispose of appliances as unsorted municipal waste; use separate collection facilities. Contact your local government for information regarding the collection systems available.

If electrical appliances are disposed of in landfills or dumps, hazardous substances can

leak into the groundwater and get into the food chain, damaging your health and well-being.

When replacing old appliances with new ones, the retailer is legally obligated to take back your old appliance for disposals at least free of charge.

3 Unloading, Transportation, and Storage

Precautions

There are generally horizontal packaging and vertical packaging in module packaging. It is fixed with external packing tape and prohibited from touching and colliding.

Forklifts are usually used to transport the modules in pallets, and sufficient safety distance should be reserved during forklift operation. Do not stand or pass by both sides of the forklift.

Pay attention to controlling the moving speed during the traveling and unloading process of the forklift, in order to prevent the modules from falling over when turning or stopping sharply, causing damage to products or people.

Ensure the modules and packaging are placed on the flat ground without sharp and protruding debris to avoid tipping.

Horizontal Packaging

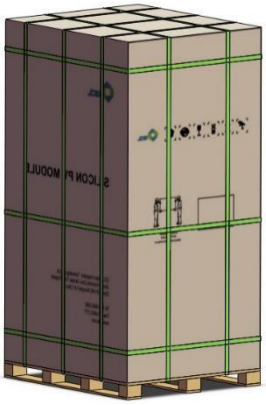

Vertical Packaging

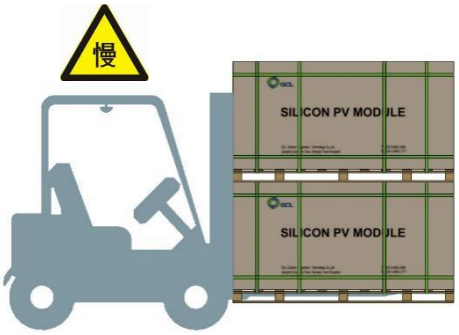

Low-speed Transportation,
Pay Attention to Pedestrians

Under any circumstances, do not pile more than two layers of long-side horizontal packaging and short-side vertical packaging, and the piling pattern is as follows.

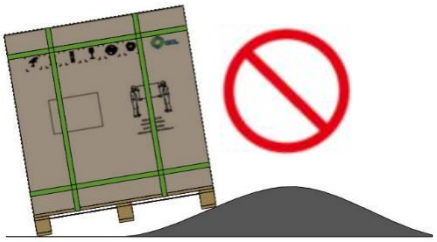

Tilted Placement is Prohibited

Piling Pattern

3.1 Unloading

After the modules arrive at the project site, the truck should stop and unload at a flat and open area. After

arrival, please check whether the outer packaging box is in good condition and verify whether the module type and quantity on the outer package are consistent with the delivery note.

Unloading by Forklift

Choose the forklift with suitable load capacity according to the weight of the goods, and choose the suitable fork according to the size of the goods (generally the depth of forks into the pallet shall not be less than three-quarters of the pallet length, If there are adjacent modules, the tines should be prevented from extending beyond the tray and damaging the adjacent modules.), unload the modules from the truck, and place them on the horizontal ground.

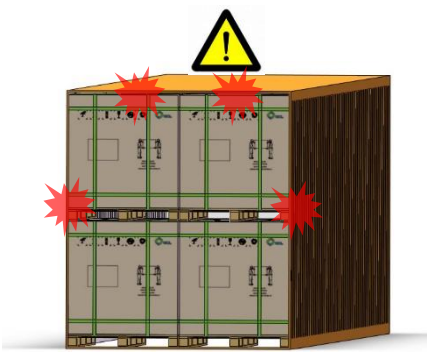

Carriage Shipping

The height of the loading and unloading platform where the forklift is located should be as high as possible with the bottom of the carriage. When picking up the goods from the container carriage, you should pay attention to avoid the forklift colliding the goods with the box, especially prohibit lifting the package too high, resulting in colliding, or cutting the top of the carriage or the door frame of the carriage.

If the packing box blocks the driver's line of sight during loading and transportation with the forklift, it is recommended to arrange for a special person to supervise and direct the loading and transportation, so as to prevent the collision from causing damage to the products and personnel in the traveling.

Unloading by Crane

When unloading by crane, please use special equipment tooling. Before hoisting, choose a hoisting tool with sufficient load-bearing capacity according to the weight and size of the module packaging, keep the center of gravity of the module stable throughout the hosting, use solid wood to assist in hoisting, and fix the lifting belt in the solid wood support frame buckle.

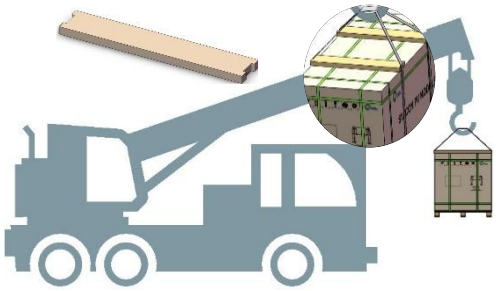

Unloading by Crane

Only 1 pallet is allowed to be hoisted at a time. Before hoisting, make sure that the pallet and carton are not damaged and that the hoisting ropes are strong and secure. When the crane is about to land, there should be one person on the left and right side of the carton, holding the carton gently in a relatively flat position on the project site.

Do not hoist the modules and packaging under the weather conditions of wind level greater than 6, heavy rain or heavy snow.

3.2 Secondary Transportation

Packaged products can be transported by land, sea, or air. During transportation, regardless of the transportation method, please fasten the packaging boxes on the transportation platform to ensure that they will not tip over or shift. Any mode of transportation needs to ensure that the outer packaging box and the transport facilities will not come into direct contact. When choosing truck

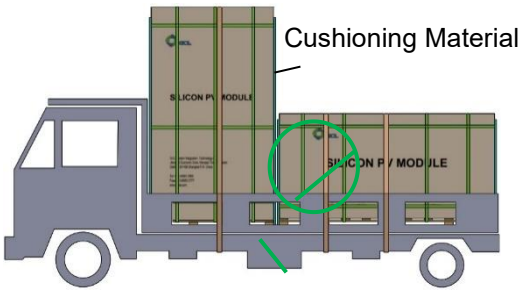

Place One Pallet with Rope Fixing

transportation, sufficient space should be reserved between the packaging box and the vehicle or cushioning materials should be added to isolate them. When choosing the container transportation vehicle for transshipment, the net size of the transshipment vehicle shall not be smaller than the inner size of the standard of 20 GP container, 40 GP high-bay container and other containers. In the event of rain or snow, the transportation of modules is prohibited in theory, and please cover the packaging completely with a rain cover when transporting.

When using a pickup for transportation, only single layer placement is allowed regardless of the packaging method, while the packaging shall be fixed around the vehicle with safety ropes, and the part of the safety rope in contact with the packaging carton needs to be isolated with paper angle bead or other cushioning materials to avoid direct contact, causing the damage to the packaging. The driver needs to pay attention to the road conditions and control the driving speed.

When using vehicles for transportation, the packaging pallets are prohibited to go beyond the loading area of the transportation vehicles.

When transporting at the project site, do not use platform trolley or tricycles and other small transport vehicles to transport or handle the modules. Do not pile up, and only 1 layer is allowed when transporting.

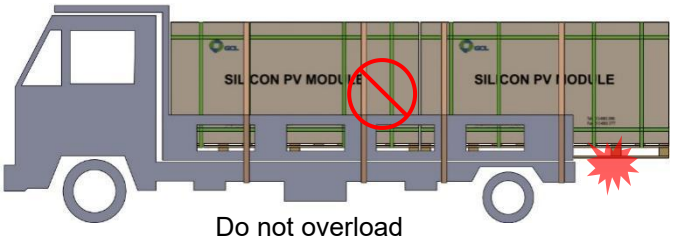

Do not overload

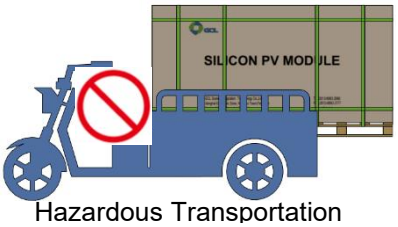

Hazardous Transportation

3.3 Storage

Please store the modules in a dry and ventilated environment and place the modules on a relatively flat ground to avoid damage to the packaging and internal products due to ground deformation or collapse. Storage environment requirements: humidity <85%, temperature -20℃ to +50℃; static piling of modules ≤ 2 pallets (1 pallet is recommended), the vertical package is placed in a single pallet, and the pallet cannot be squeezed.

If the modules need to be transported or stored for a long time and are not used temporarily, please do not remove the outer wrap film and ensure the carton is in good condition. And arrange regular inspection by relevant personnel, once the package deformation or tilt is found, timely and effective reinforcement should be carried out.

Modules should be stored centrally, and shall not be accessed by non-related personnel. When stored outdoors, it should be stored on a solid and flat ground with a high level, as far away as possible from rivers and soft geological areas, and the packaging carton should be required by sunscreen measures (shading in the material yard); When stored indoors, ensuring that the top of the warehouse does not leak.

In rainy weather, use rain cloth to cover the module packaging, preventing the modules from getting wet. Remove the rain cloth when the weather is clear to keep it dry and avoid moisture damage to the package. Avoid pallets from soaking in water and drainage measures should be carried out.

Unpacking Instructions

When unpacking outdoors, do not work under rainy conditions. If the site is windy, please pay special

attention to safety issues. Especially in windy conditions, it is recommended not to carry the modules and to secure the unpacked modules properly.

Before unpacking, please check the product model number, classification information, serial number and other precautions on the outer box mark (A4 paper) and read the relevant operation instructions carefully before operation, and violent disassembly is prohibited. After dismantling the outer box, please check whether the barcode of the modules inside is consistent with the mark.

Please keep the box horizontally and stably on the working floor to avoid tipping.

When removing the internal strap packing belt, please protect the modules in advance to prevent tipping.

Two people are required to lift each module. When lifting the module, do not pull the junction box and wires.

Do not stand on the pallet when unpacking, and the modules should be carried from both sides of the pallet. Please wear protective gloves when unpacking to avoid scratching your hands and leaving fingerprints on the glass.

If the operation is not in accordance with the requirements or the operation is not skilled, a small amount of angle bead will fall off, which is a normal phenomenon. The angle bead serves to protect the modules from external damage during transportation and does not affect the reliability of the modules.

If you do not take out all the modules after unpacking, please place the remaining modules horizontally (the glass side of the lowest module facing up, the glass side of the rest of the modules facing down, Protective measures should be taken between the modules and the pallet.) and adopt simple packaging to prevent damage from tipping. The maximum piling number of modules per pallet is 15.

4 Location and Angle

4.1 Installation Environment

The recommended weather conditions for installing modules are:

a) Humidity: ＜85% RH

b) Ambient air temperature range: -40℃ to +40℃

Operating temperature: -40℃ to +70℃

Select the appropriate location for the module installation. In the northern latitude region, the front of the module should be placed facing south, and in the southern latitude region, the front of the module should be placed facing north.

The installation site should have sufficient light and not be shaded at any time. If the module is shaded or partially shaded, its power output will be reduced. Long-term shading or frequent shading causing damage to the modules is not covered by GCL SI's warranty.

Do not store, install, or use the modules in places where inflammable gases are easily generated or gathered, and be alert to oil and gas pollution. The damage to modules caused by non-human factors that may exist in the environment (such as rockfalls in the mountains, birds of prey in the wild, etc.) should be investigated and avoided, and at least corresponding protection should be taken.

When installing modules on the roof, the roof should be verified for load and the construction plan should be reasonably designed, while a sufficient safe working area must be left between the edge of the roof and the outer edge of the PV module array. It is recommended to leave enough space under the modules for heat dissipation to avoid high temperature accidents under abnormal conditions.

The straight-line distance between the installation site and the coastline shall be not less than 50 m unless otherwise agreed in a written form by GCL SI or stated in the contract.

The maximum altitude of module installation is 2000m.

It is possible that modules installed with restricted airflow are not allowed for use in some hot locations, depending on system design parameters. Installers should assess if the system design at a specific geographic location will result in a 98th percentile module operating temperature (represents the temperature that is larger than 98% of all the temperatures, and consequently it is met or exceeded only 2% of the time. It is to be determined from measurements taken on hourly-basis, or more frequently. For a standard year, the temperature that a module would be expected to equal or exceed for 175.2 h per year, is less than 70 ℃.) greater than 70 ℃, and must consider and avoid these factors in design of systems.

4.2 Selection of Tilt Angles

The tilt angle of the PV module refers to the angle between the PV module and the horizontal ground. Different projects need to choose different installation tilt angles according to local conditions, and modules connected in string should be installed at the same angle. Modules installed at different angles will get different irradiation and cause a current mismatch, leading to lower operating efficiency of the system.

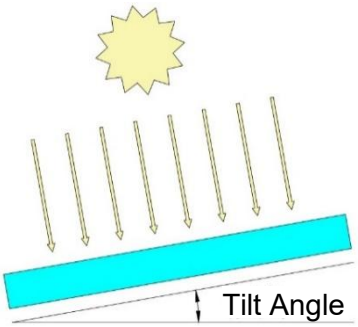

It is generally recommended that the tilt angle of module installation is not less than 10° so module surface dust can be washed away easily by rainfall and the frequency of cleaning can be reduced. And it is easy for accumulated water to flow away physically, avoiding long-term water accumulation to produce a local light-concentrating, and avoiding watermarks on the glass surface which may further affect module appearance and performance.

If the modules are used in an off-grid system, the tilt angle should be calculated based on seasons and irradiation to maximize the output power. If the modules' output power meets the acquired load under the period of the worst irradiation in the year, the modules should be able to meet the load of the whole year; if the modules are used in a grid-connected system, the tilt angle should be calculated based on the principle to maximize the yearly output power.

5 Mechanical Installation

GCL SI PV modules are generally divided into monofacial modules and bifacial modules according to different structural modules. In addition to the mechanical and electrical structures, some identification labels exist for the modules, which are described as follows:

Nameplate: Describes the product type, as well as the rated power (Pmax), rated voltage (Ump), rated current (Imp), open circuit voltage (Voc), short circuit current (Isc), certification mark, maximum system voltage and other information under standard test conditions. The nameplate is usually pasted on the back of the module.

Serial number barcode: There is a unique serial number for each module, printed on top of the barcode label. It is the identification mark of the module, associated with all production information of the module, in the non-cell area inside the module, visible from the front side and cannot be destroyed. At the same time, an identical serial number can be found on the outer back side and frame.

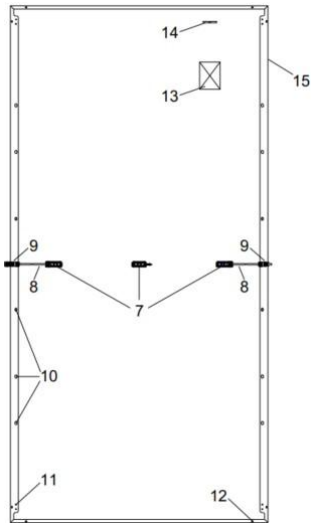

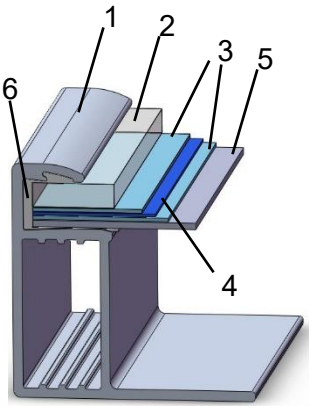

Drawing of Single Glass Modules

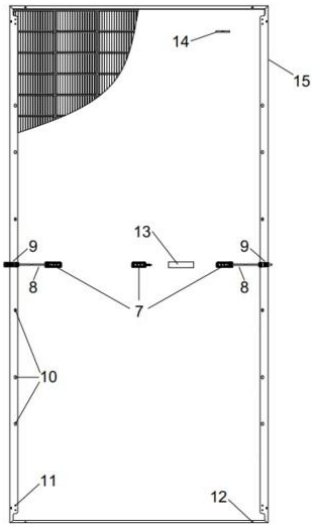

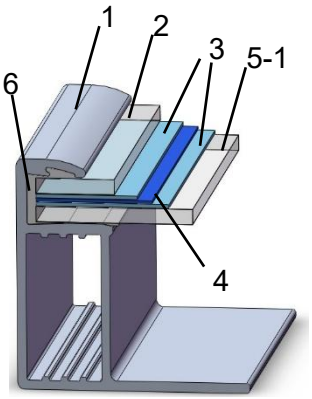

Drawing of Dual Glass Modules

1 Aluminum alloy frame	2 Photovoltaic glass	3 Encapsulated Film	4 Cell Unit
5 Encapsulated Backsheets	5-1 Back Glass	6 Sealant Silicone	7 Junction Box
8 Wire	9 Connector	10 Mounting Holes	11 Grounding Holes
12 Drain Holes	13 Nameplate	14 Bar Code	15 Bar Code

Typical Mechanical Drawing of Module Structure and Parts Description

5.1 Installation Requirements

Make sure that installation method and mounting structure are solid enough to meet the expected load-bearing requirement, and that the PV system installer or supplier should provide the requisite assurance and relevant certifications. Installation bracket system shall be tested and inspected by the third party testing institution with static mechanical analysis capacity in accordance with local national standards or national standards such as DIN1055 or equivalent.

Mounting structure shall be made from durable, corrosion resistant, UV-proof materials.

The instructions guidance and safety codes accompanying the bracket must be followed.

Wherever the modules are installed, it is important to ensure that the modules are solidly fixed on the mount so that they can withstand the wind and snow loads.

Choose a suitable mounting height for your PV system and also ensure that the lowest part of the module is high enough to avoid being shaded by plants or damaged by flying sand and stone. You should also prevents the lower part of the module from being covered with snow for a long time in winter when it snows.

Considering the effect of linear thermal expansion of the module frame, a minimum installation distance of 10 mm between two modules is recommended.

Do not drill holes in the surface and frame of the module glass, or the warranty will be invalid.

Make sure that backsheet of modules will not be in contact with bracket or building structures that can pierce into the inside of the modules, especially when the module surface is imposed by pressure.

When the module is installed on a roof or building, make sure it is solidly fixed and will not be damaged by strong winds or heavy snow, and that the back of the module is well ventilated to allow for cooling of the module (the minimum gap between the module and the mounting surface is 10 cm).

When installing modules on the roof, ensure that the roof structure is suitable for installation. In addition, the part of the roof that needs to be penetrated when installing fixed modules must be properly sealed to prevent leakage.

When installing modules on posts, select a post and module installation structure that can withstand the expected local winds.

Before installation, please carefully inspect the module for any abnormalities such as broken glass, scratches on the backsheet, or deformation of the frame. If any abnormalities is found, the installation of the module is prohibited.

The proper wire length should be selected in advance according to the installation site. After installation, check whether the module is blocked by wires or other tools, and in the case of bifacial module installation, please also avoid the cell on the back side of the module being blocked.

Do not install modules in rainy, snowy or windy weather. If the modules are installed after rain or on a morning with heavy dew, proper protection measures are required to avoid the intrusion of water vapor into the connectors causing a safety hazard.

When installing the module, be cautious not to block the drain holes of the frame.

Modules can be installed horizontally or vertically. The maximum static loads described in this manual are based on horizontal installation tests.

Installation Mode

Module and bracket system connection can be realized by mounting holes, clamps, or embedded systems. Installation of the modules must be performed in accordance with the demonstration and suggested operations listed in this manual. If installation mode is different, please consult GCL SI and obtain GCL SI's approval. Otherwise, the quality warranty will be invalid.

5.2 Clamp Mounting

The module installation must match the PV bracket design and customed accessories as requested by the system design. The module must be mounted with the specified clamp, the torsion of which must meet the specified requirements.

Side clamp, middle clamp: Fastener combination, including M8 bolt, washer, spring washer, nut, etc.

Mounting tools: 13 mm socket wrench (optional electric wrench), torque wrench 5～30 N•m, clamp tightening torque 16 N•m～20 N•m.

Modules can be mounted horizontally and vertically. The first and last modules of each array need to be fixed with side clamp. Use middle clamp to fix between modules.

In any case, the clamp must be in full contact with the module. Partial contact is not allowed.

Make sure that there is no shadow caused by clamps on the front or back side of modules. The drain holes of modules cannot be blocked by clamps.

Clamp installation is as followings:

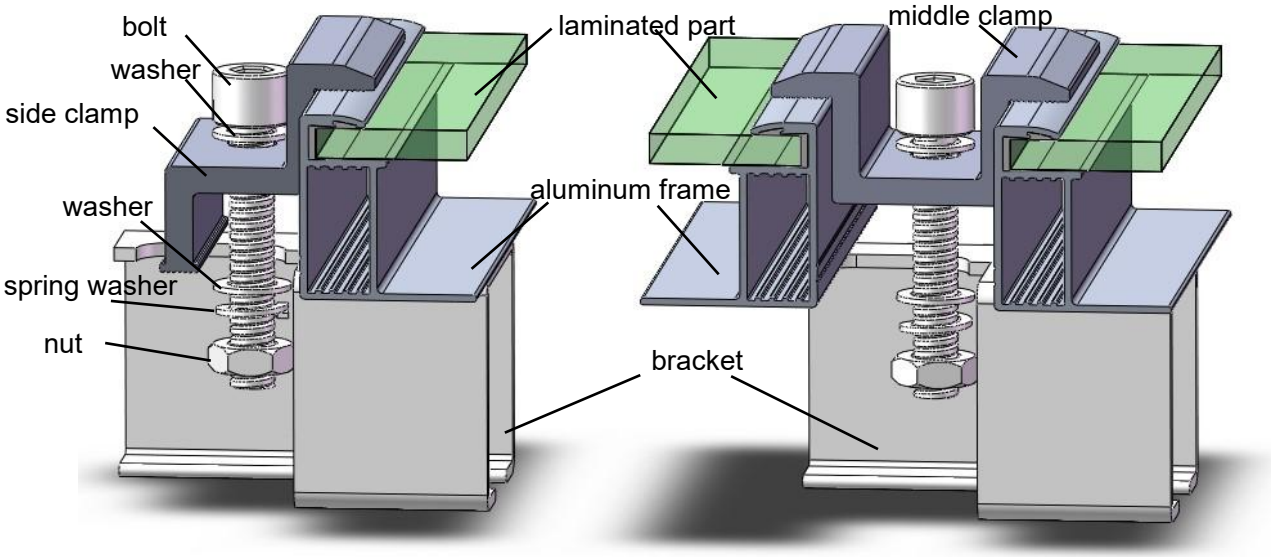

Module Clamp Installation

5.2.1 Clamp Selection

Use clamp to fix modules on the bracket and ensure a close connection between clamp and the frames of

modules. Make sure clamp do not contact the glass surface of modules to avoid frame deformation; when fixing with clamp, the length of the A side of the module frames shaded by clamp should be 8 mm≤d≤12 mm.

Clamp need to meet: length ≥ 50 mm, thickness ≥ 4 mm, anti-corrosive materials, Rp0.2 ≥ 225 MPa, Rm ≥ 265 MPa. Normally, screw holes is recommended for the installation of large-size modules (referring to modules with the long side over 2.2 m or the short side over 1.3 m).

If modules must be fixed and mounted by clamp due to limited conditions (Such as large-sized modules or short-sided installations), the clamp must have high load resistance and meet the basic requirements in the table below.

Clamp Description	High-load resistance clamp refer to clamp with special anti-slip designs, such as curved lamination that fits the A side of frames or the latch block structure design. High-load resistance clamp can better fix the modules and prevent them from falling off or breaking due to possible serious deformation under heavy rain or wind. The high-load resistance clamp selected must pass the relevant authoritative certification tests. The clamp to be tested and large-size modules must, after being mounted and fixed according to the standard, pass the wind and snow load tests of the intensity required in the contract.
Cautions	During the installation of large-size modules, if high-load resistance clamp are not used, or the clamp and modules are not fixed standardly (including the quantity and installation position of clamp), any resulting accidents like dropping or breaking of modules are not eligible for warranty service.

For technical requirements and detailed information about clamp, please consult the after-sales service team of GCL SI (see Appendix A for clamps recommended by GCL SI).

Please read the following installation process and know it well before starting the installation. Also, please make all site preparations before installation.

5.2.2 Installation Process

Step 1: Bracket mounting Mount the rail bracket		
Step 2: Clamp mounting Fix the clamp on the bracket and leave the nut not tightened	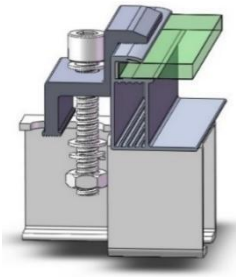	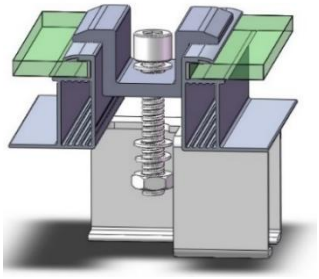

Step 3: Module Mounting Put the module into the clamp at the required position and tighten the nut. The tightening torque of the clamp should be 16 N•m～20 N•m	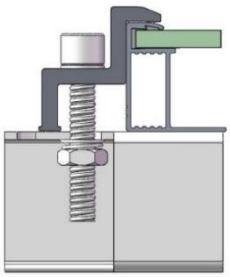	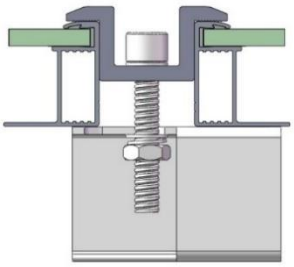
	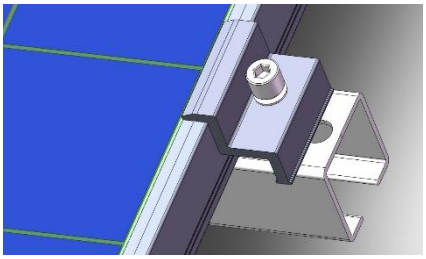	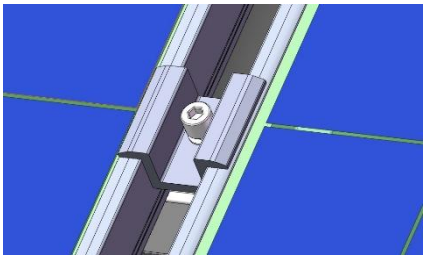
	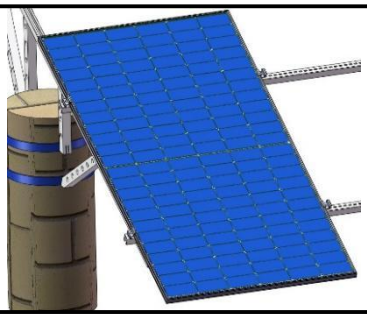	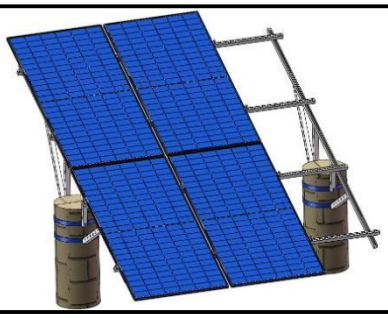

5.2.3 Installation Method

The number and location of clamps are critical to the reliability of the installation. Normally, there should be no less than four clamps. The location of the centerlines of clamp is specified according to the different load and installation methods. The clamp must be mounted within the permitted mounting area.

Installation Method A: Fix the module with four clamps. Mounting rails cross the long frame.	Installation Method B: Fix the module with six clamps. Mounting rails cross the long frame.
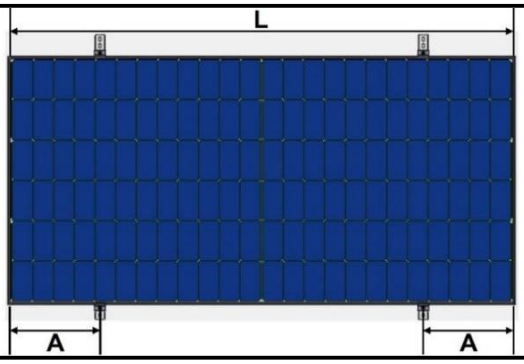	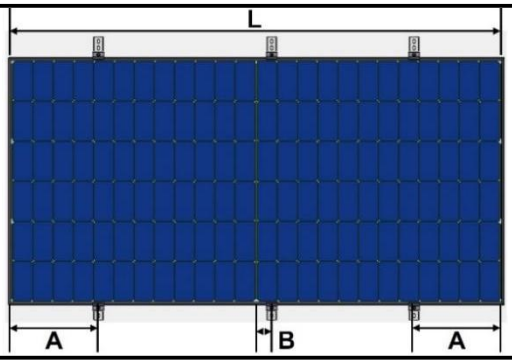

Installation Method C: Fix the module with four clamps. Mounting rails overlap the long frame.

The overlap width should be no less than 20 mm.

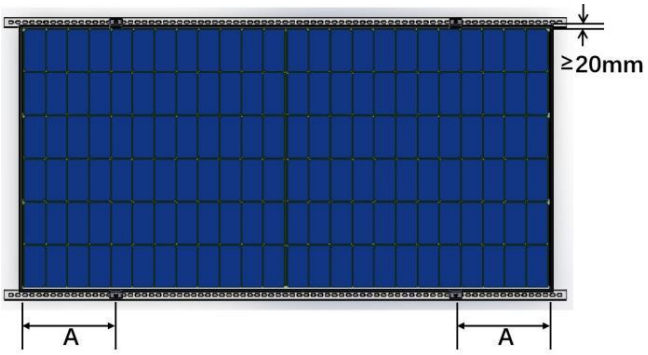

The Maximum Test Load of Mono-Facial Module Installation

Product Type	Installation Method A		Installation Method B		Installation Method C	
	-/mm		B=(75-100)mm		-/mm	
GCL-M10/54H	300≤A≤400	5400/2400	300≤A≤400	5400/2400	/	/
GCL-M10/54BH	300≤A≤400	5400/2400	300≤A≤400	5400/2400	/	/
GCL-NT10/54H	300≤A≤400	5400/2400	300≤A≤400	5400/2400	/	/
GCL-M10/60H	400≤A≤500	5400/2400	400≤A≤500	5400/2400	/	/
GCL-M10/60BH	400≤A≤500	5400/2400	400≤A≤500	5400/2400	/	/
GCL-NT10/60H	400≤A≤500	5400/2400	400≤A≤500	5400/2400	/	/
GCL-M10/72H	420≤A≤520	5400/2400	420≤A≤520	5400/2400	/	/
GCL-M10/72BH	420≤A≤520	5400/2400	420≤A≤520	5400/2400	/	/
GCL-NT10/72H	420≤A≤520	5400/2400	420≤A≤520	5400/2400	/	/
GCL-M10/78H	490≤A≤550	5400/2400	420≤A≤520	5400/2400	/	/
GCL-M12/60H	440≤A≤540	5400/2400	420≤A≤520	5400/2400	/	/
GCL-NT12/60H	440≤A≤540	5400/2400	420≤A≤520	5400/2400	/	/
GCL-M12/66H	460≤A≤540	5400/2400	420≤A≤520	5400/2400	/	/
GCL-NT12/66H	460≤A≤540	5400/2400	420≤A≤520	5400/2400	/	/

The Maximum Test Load of Bifacial Module Installation

Product Type	Installation method A		Installation method B		Installation Method C	
	-/mm		B=(75-100)mm		-/mm	
GCL-NT10/54GDF	300≤A≤400	5400/2400	300≤A≤400	5400/2400	/	/
GCL-M10/60GDF	300≤A≤400	5400/2400	300≤A≤400	5400/2400	/	/
GCL-NT10/60GDF	400≤A≤500	5400/2400	400≤A≤500	5400/2400	/	/
GCL-M10/72GDF	420≤A≤520	5400/2400	420≤A≤520	5400/2400	/	/
GCL-NT10/72GDF	420≤A≤520	5400/2400	420≤A≤520	5400/2400	/	/
GCL-NT10/78GDF	490≤A≤550	5400/2400	490≤A≤550	5400/2400	/	/
GCL-NT10R/54(B)GDF	300≤A≤400	5400/2400	300≤A≤400	5400/2400	/	/
GCL-NR10R/54(B)GDF	300≤A≤400	5400/2400	300≤A≤400	5400/2400	/	/
GCL-NT12R/48(B)G(D)F	300≤A≤400	5400/2400	300≤A≤400	5400/2400	/	/

GCL-NR12R/48(B)GDF	300≤A≤400	5400/2400	300≤A≤400	5400/2400	/	/
GCL-NT12R/54(B)G(D)F	400≤A≤500	5400/2400	400≤A≤500	5400/2400	/	/
GCL-NT12R/66GDF	460≤A≤540	5400/2400	420≤A≤520	5400/2400	420≤A≤520	3600/2400
GCL-NR12R/66GDF	460≤A≤540	5400/2400	420≤A≤520	5400/2400	/	/
*GCL-NT12R/78GDF	490≤A≤550	5400/2400	420≤A≤520	5400/2400	/	
GCL-M12/60GDF	440≤A≤540	5400/2400	420≤A≤520	5400/2400	/	
GCL-NT12/60GDF	440≤A≤540	5400/2400	420≤A≤520	5400/2400	/	
GCL-NH12/60GDF	440≤A≤540	5400/2400	420≤A≤520	5400/2400	/	
GCL-M12/66GDF	460≤A≤540	5400/2400	420≤A≤520	5400/2400	/	
GCL-NT12/66GDF	460≤A≤540	5400/2400	420≤A≤520	5400/2400	420≤A≤520	2800/2400
GCL-NH12/66GDF	460≤A≤540	5400/2400	420≤A≤520	5400/2400	/	

Installation Method D: Fix the module with four clamps. Mounting rails cross the short frame.		Installation Method E: Fix the module with four clamps.	
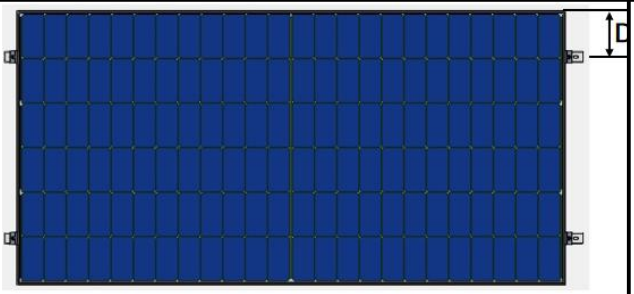		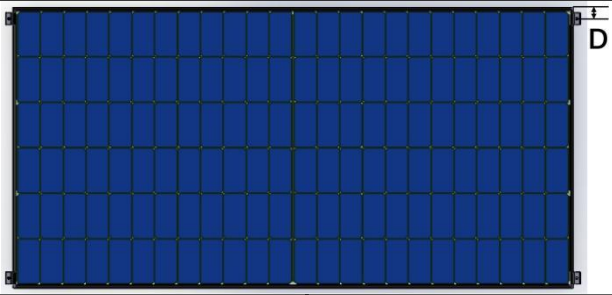	
	Installation method D	Installation method E	/
	100mm≤D≤300mm	30mm≤D≤130mm	/
GCL-NT10R/54(B)GDF	1800/1800	1600/1600	/
GCL-NR10R/54(B)GDF	1800/1800	1600/1600	/
GCL-NT12R/48(B)G(D)F	1800/1800	1600/1600	/
GCL-NT12R/54(B)G(D)F	1400/1400	1200/1200	/

Note: Test load = γ m (1.5 times safety factor) × design load.

Modules with steel frame are suitable for Installation Method A and Installation Method B.

For modules with an "*", it is recommended to use the anti-release clamps (as seen in Appendix A). As different types of modules are different in length (L), width (W), and height (H), and modules of the same type can have multiple sizes, please refer to GCL SI Product Datasheet for details. The Manual specifies the maximum design load of GCL SI standard products, but low-load products of the same types are also available. Please contact the GCL SI sales team for detailed information.

5.3 Bolt Mounting

There are at least 4 mounting holes of size φ9*14 mm matching M8 bolts on the frame of each module (some modules have 8 holes, please refer to GCL Integrated Product Specifications, hereinafter referred to as outer four-hole or inner four-hole). Some modules have an additional 4 mounting holes with a width of 7 mm matching M6 bolts (400 mm or 790 mm holes for short).

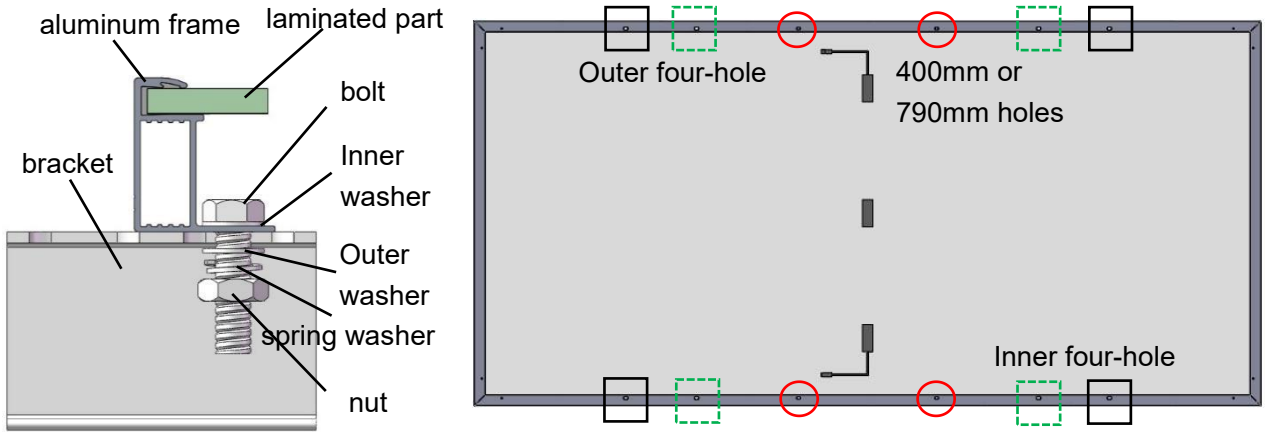

Bolt Mounting of Modules

It is recommended to use corrosion-proof fixings to maximize mounting duration for longer module longevity.

Advice: The yield strength of bolts and nuts should be not less than 450 MPa. The tightening torque of M8 bolts should be 14～20 N•m; the tightening torque of M6 bolts should be 8～14 N•m. The minimum outer size of the washer in the frame is not less than 17 mm, and the thickness is not less than 2 mm.

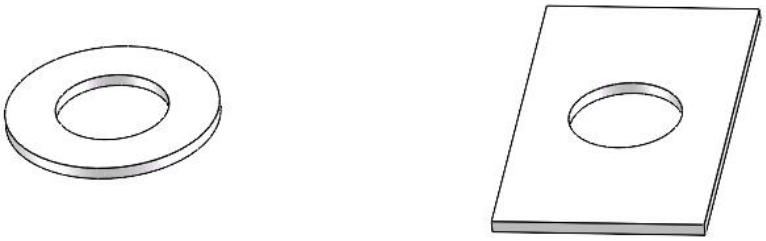

Illustration of the shape of the washer

Installation of Single-axis Tracking System

Single-axis tracking method: Commonly, connect the 400 mm or 790 mm holes on the long frames of the module with M6 bolts, two flat washers, one spring washer, and nuts to fix the module on the tracking axis. Fastener mounting torque range: 8～14 N•m. When installing accessories, pay attention to avoiding the junction box, or adopt buffer protection measures.

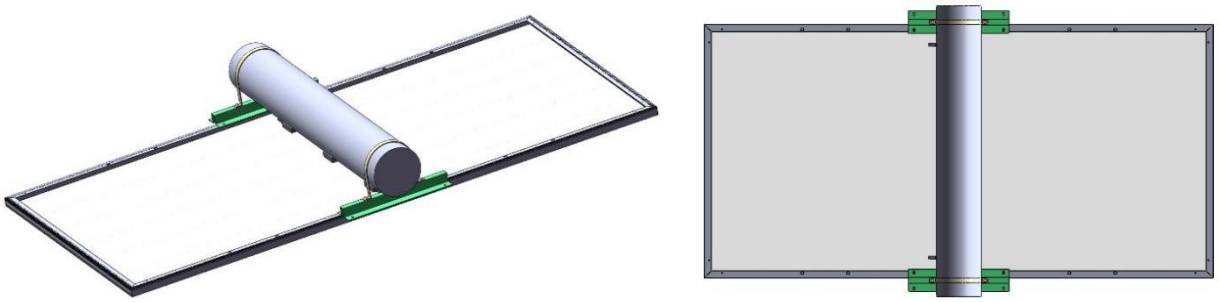

Installation of a module with the single-axis tracking system

The installation method in the Manual is for guidance only. The design of the tracking bracket system, the selection of accessories, and the installation of the modules must be done by a professional installer.

Please refer to the load of 400 mm or 790 mm hole bolts mounting for the load of the single-axis bracket

system, which, however, is also affected by the bracket manufacturer's material and design.

5.3.1 Installation Process

The modules can be installed horizontally or vertically. Refer to clamp mounting for the bolt mounting process. After setting the bracket and placing the module on top of it, put the bolts in the mounting holes and tighten them after the module is adjusted.

5.3.2 Installation Method

Installation Method F: Single-axis tracking system installation.	Installation Method G: Mounting rails cross the long frame.
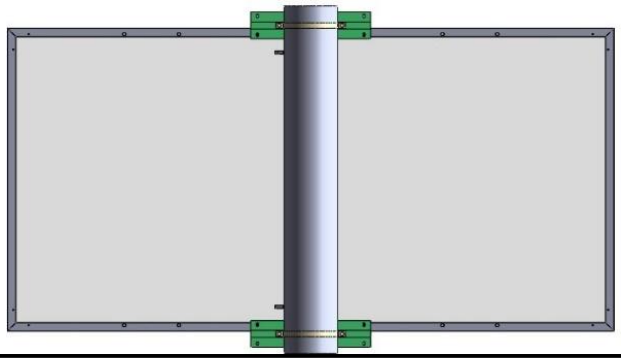	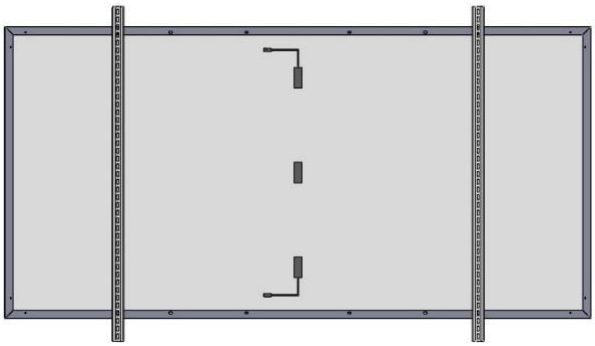

Installation Method H: Mounting rails overlap the long frame.

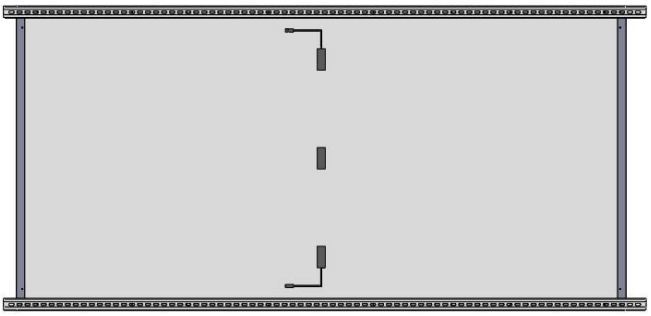

The Maximum Test Load of Mono-Facial Module Installation

Product Type	Installation Method F	Installation Method G		Installation Method H
	single-axis system	Inner four-hole	Outer four-hole	Outer four-hole
GCL-M10/54H	/	5400/2400	/	
GCL-M10/54BH	/	5400/2400	/	/
GCL-NT10/54H	/	5400/2400	/	/
GCL-M10/60H	2400/1900	5400/2400	/	/
GCL-M10/60BH	2400/1900	5400/2400	/	/
GCL-NT10/60H	2400/1900	5400/2400	/	/
GCL-M10/72H	2400/1900	5400/2400	5400/2400	/
GCL-M10/72BH	2400/1900	5400/2400	5400/2400	/
GCL-NT10/72H	2400/1900	5400/2400	5400/2400	/
GCL-M10/78H	2400/2400(790 hole)	5400/2400	5400/2400(1400 hole)	/

			3600/2400(1600 hole)	
GCL-M12/60H (Reinforcing ribs)	/	/	5400/2400	/
GCL-M12/66H (Reinforcing ribs)	/	/	5400/2400	/
GCL-M12/60H	2300/2300	/	5400/2400	/
GCL-NT12/60H	2300/2300	/	5400/2400	/
GCL-M12/66H	2300/2300	/	5400/2400	/
GCL-NT12/66H	2300/2300	/	5400/2400	/

The Maximum Test Load of Bifacial Module Installation

Product Type	Installation Method F	Installation Method G		Installation Method H
	single-axis system	Inner four-hole	Outer four-hole	Outer four-hole
GCL-NT10/54GDF	/	/	5400/2400	/
GCL-M10/60GDF	/	5400/2400	/	/
GCL-NT10/60GDF	/	5400/2400	/	/
GCL-M10/72GDF	1600/1600	/	5400/2400	/
GCL-NT10/72GDF	1600/1600	/	5400/2400	/
GCL-NT10/78GDF	2100/2100(790 hole)	5400/2400	5400/2400(1400 hole) 3600/2400(1600 hole)	/
GCL-NT10R/54(B)GDF	/	5400/2400	3600/2400	/
GCL-NR10R/54(B)GDF	/	5400/2400	3600/2400	/
GCL-NT12R/48(B)G(D)F	/	5400/2400	3600/2400	/
GCL-NR12R/48(B)GDF	/	5400/2400	3600/2400	/
GCL-NT12R/54(B)G(D)F	/	/	5400/2400	/
GCL-NT12R/66GDF	1600/1600	/	5400/2400	3600/2400
GCL-NR12R/66GDF	/	/	5400/2400	/
GCL-NT12R/78GDF	2400/2400(790 hole)	/	5400/2400	/
GCL-M12/60GDF(33mm)	2000/2000(400 hole) 2400/2400(790 hole)	/	5400/2400	/
GCL-NT12/60GDF(33mm)	2000/2000(400 hole) 2400/2400(790 hole)	/	5400/2400	/
GCL-NH12/60GDF(33mm)	2000/2000(400 hole) 2400/2400(790 hole)	/	5400/2400	/
GCL-M12/66GDF(33mm)	2000/2000(400 hole) 2400/2400(790 hole)	/	5400/2400	/
GCL-NT12/66GDF(33mm)	2000/2000(400 hole) 2400/2400(790 hole)	/	5400/2400	2800/2400
GCL-NH12/66GDF(33mm)	2000/2000(400 hole) 2400/2400(790 hole)	/	5400/2400	/

Note: Test load = γ m (1.5 times safety factor) × design load.

Modules with steel frame are suitable for Installation Method G.

As different types of modules are different in length (L), width (W), and height (H), and modules of the same type can have multiple sizes, please refer to GCL SI Product Datasheet for details. The Manual specifies the maximum design load of GCL SI standard products, but low-load products of the same types are also available. Please contact the GCL SI sales team for detailed information. The load values for 400 mm and 790 mm holes needs to be defined with the single-axis bracket structure, Unless otherwise specified, the load values specified in this manual are met by both hole designs.

6 Electrical Installation

The direct current generated by the PV system can be converted to alternating current and then fed into the grid. Policies regarding the connection of renewable energy systems to the public grid vary from region to region. Please consult with an experienced system design engineer for information when designing your system. Normally, approval and formal authorization from the local utility is necessary for system installation.

Safety Code

During the disassembly of the conductor, PV modules must be covered completely with opaque plastic or other covering to prevent electrical currents.

Any mounting structure material used must be compatible with the module. If not, any resulting corrosion and the following failure will void the warranty.

The potential of the DC-side system of the PV array can be managed by floating, positive grounding, and negative grounding according to the system requirements. Different cell technologies have different adaptations. On the power station project, if the module of crystalline silicon cells generates excessive absolute value of the negative potential to ground, it may lead to potential induced degradation (PID). So, it is appropriate to use the negative grounding system to ensure the positive potential of the circuit. Consult the inverter manufacturer for details.

Bypass Diode and Anti-reverse Diode

In a system with two or more modules connected in series, if part of a module is shaded while the other part is exposed to the sun, a very high reverse current will go through the cells which have been partly or entirely covered, and it will cause overheat on the cells, which may damage the module. Using bypass diodes can protect modules from this kind of risk. There are bypass diodes in junction boxes, which can reduce the hot spot effects caused by partial shadows.

Do not privately disassemble the junction box to replace the diodes, even when the diodes are broken. This should be processed by professionals.

In a system with storage batteries, if the controller doesn't have the function of backswing protection, block diodes installed between the battery and the module can prevent the reverse current from damaging the module.

Cables and Connectors

Refer to local laws and regulations to determine the size, type, and temperature of the wire for the system.

Select suitable cross-sectional areas and plug capacity that are approved for use at the maximum short-circuit current of the system (it is recommended that the cross-sectional area of cables for a single module is not less than 4 mm^2, Please select the appropriate cable for photovoltaic power generation according to the local design and specification standards), otherwise, the cable and connector will overheat under excessive current. Note: The upper temperature limit of cables is 85°C, and the upper temperature limit of connectors is 105°C.

During the installation of the module, make sure that the connectors (It is recommended to use an inverter

with DC arc detection) , inverter and other electrical components are turned off. To reduce the damage caused by lightning strikes, the cable must be laid with the smallest possible loop area, and it is advised to use a suitable fuse for each string.

Adopt UV-resistant cable ties and clamps to fix cables on the bracket. When cables are fixed on the bracket, avoid mechanical damage to cables or modules. Do not press cables by force.

Though cables are UV-resistant and waterproof, it is still necessary to prevent cables from direct sunlight (Being illuminated by light passing through gaps between modules is allowed.) and water immersion.

The bending radius of cables should be over 43 mm. The connection of connectors and cables especially should not be overbent.

Please keep connectors dry and clean, and ensure that connector caps are hand-tight before connecting the modules (you will hear the sound of snapping in when it is fully connected). Non-professionals are not allowed to open the tightened connector caps.

Do not connect connectors in damp, dirty, or other exceptional situations. Avoid sunlight exposure (Being illuminated by light passing through gaps between modules is allowed.) and water immersion of the connectors. Avoid allowing connectors to rest on the ground.

Connectors being connected and used are forbidden from contacting organic solvents and other corrosive materials, such as alcohol, gasoline, pesticides, herbicides, oxalic acid, etc. Please consult GCL SI for details; otherwise, GCL SI will not be responsible for any resulting connector cracking problems.

Ensure that the connectors are connected with each other under the appropriate IP protection level for appropriate electrical safety. Different types of connectors are not recommended to connect with each other. If you must use them, please consult GCL SI.

Module Connection

Do not use different types of models in the same solar PV system.

Under normal conditions, a module is likely to experience conditions that produce more power than reported at standard conditions. Accordingly, when determining accessories of the PV power generation system and their parameters related to the power output of the PV module, such as rated voltage, rated current, wire capacity and fuse specifications, the values of Isc and Voc marked on the module should be multiplied by 1.25.

The same string of modules should be at the same current level, which can be identified by the package mark or the sorting label on module frames.

When modules are connected in series, the voltage of each string must not exceed the maximum system voltage and the maximum input voltage of the inverters and other electrical equipment in the installed system. The maximum quantity of module strings can be calculated by the following formula:

$$N \times Voc \times [1 - TC_{Voc} \times (25 - T_{min})] \leq \text{Maximum system voltage}$$

In the formula:

N: Quantity of module strings

Voc: Open circuit voltage of the module (refer to the description on the product nameplate label)

TC_{Voc}: Temperature coefficient of open circuit voltage for the module (refer to the product specification table)

T_{min}: The lowest ambient temperature in the locality

When the modules are connected in parallel, the output current of the whole string of modules will be equal to the sum of the current of each branch or string. A fuse should be installed for each module string. Please refer to the codes of the country or region and select the suitable fuse type according to the correction factor.

$$\frac{1.5}{K_f} \times I_{sc} \leq I_n \leq \text{The maximum rated current of fuse for moduels}$$ (Applicable to IEC standard)

$$\frac{1.56}{K_f} \times I_{sc} \leq I_n \leq \text{The maximum rated current of fuse for moduels}$$ (Applicable to NEC standard)

In the formula:

K_f: Temperature correction factor

I_n: Rated current of the fuse

I_{sc}: Short-circuit current of the module

Use the temperature correction factor (K_f) to correct the rated current for different temperatures of operating environments. Please confirm with the qualified design organization and fuse manufacturer at the installation site to select the final fuse type. The maximum rated current of fuse for modules on the GCL SI product datasheets is for reference only.

6.1 Wiring

To ensure proper system operation, observe to guarantee the correct cable connection polarity when connecting the modules or connecting loads (e.g., batteries, inverters, etc.). If not connected correctly, the bypass diode could be destroyed. PV module systems are generally connected in series for more voltage and in parallel for more current.

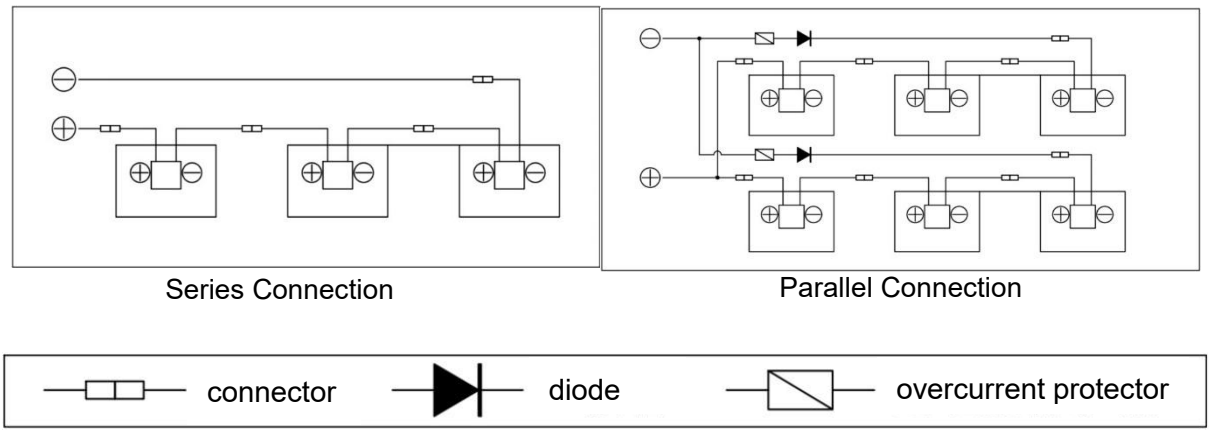

Series Connection and Parallel Connection Circuit Diagram

If there may be reverse currents through the module that exceeds the module's maximum fuse current, an overcurrent protection device of the same specification must be used to protect the module. If there are two or more strings of parallel connections, each string of modules must be equipped with an overcurrent protection

device, as shown in the diagram above.

The proper system and cable length of the junction box should be selected in advance according to the module installation method. We suggest the following wiring methods.

Suggested Connection Methods	Illustration
Vertical Installation of Modules	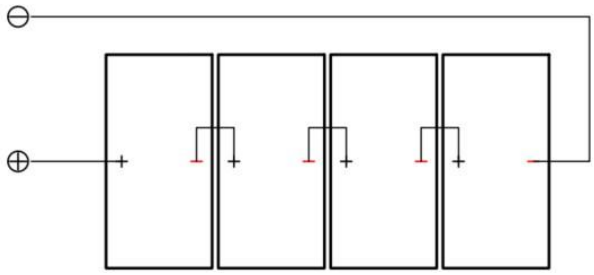 I-type wiring method
	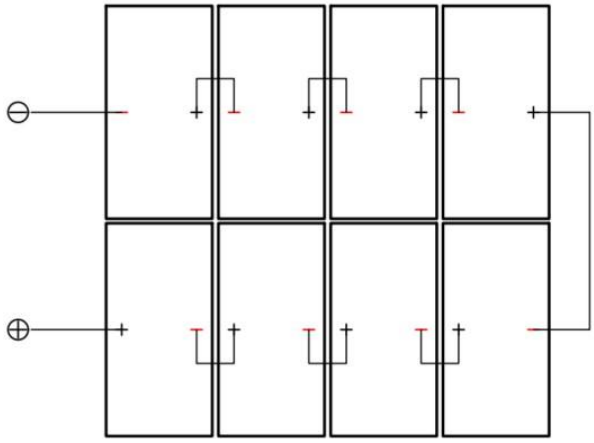 C-type wiring method
Horizontal Installation of Modules	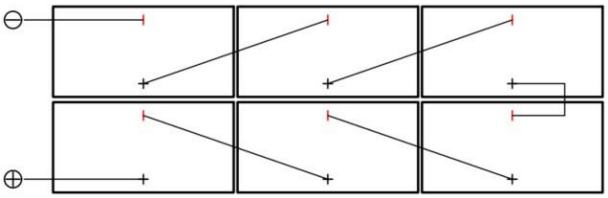 Long cable connection

6.2 Grounding

In the design of modules, the anodized corrosion-resistant aluminum alloy frame is applied for rigidity support. For safety considerations and to protect modules from lightning and electrostatic damage, the module frame must be grounded. The grounding device must be in full contact with the inner side of the aluminum alloy and penetrate the surface oxide film of the frame. The grounding conductor or wire may be copper, copper alloy, or any other material acceptable for application as an electrical conductor as per respective National Electrical Codes. The grounding conductor must then make a connection to the ground with a suitable ground electrode.

Holes on the frame marked with a grounding symbol can only be used for grounding, not for module

installation.

All module frames and mounting brackets must be properly grounded in accordance with the relevant electrical regulations of each country. Use the recommended connection terminals to connect the grounding cable properly and fix the cable to the module frames.

If the bracket used consists of metal, the bracket surface must be plated to ensure good circuit continuity.

Proper grounding can be achieved by connecting this module frame to the bracket with an appropriate grounding conductor.

Grounding Wire + Bolt Installation

There is a grounding hole with a diameter of about Φ4 mm on the edge of the module frame, next to which there is a standard grounding symbol "⏚". Use the bolts to connect the grounding wire. Please do not drill holes in module frames or modify the standard hole. Such behaviors will void the warranty.

Please use stainless-steel grounding bolts. First, make the bolt pass through the spring washer, flat washer, cup washer, and star washer, and then the grounding hole on the frame, spring washer, and flat washer. Finally, tighten the bolt with a nut. Caution: The upper limit of the conductor's temperature is 85℃. Refer to the grounding hole mounting diagram for illustration.

Grounding Wire + Grounding Clamp Installation

The grounding conductor must be connected to the ground via an appropriate grounding electrode. It is recommended to use wire lugs to connect the grounding cables. If the bracket is only mechanically connected to a grounded module without bolts and nuts, it should be grounded as well.

Either a grounding hole or an unused mounting hole can be used, with the bolts passing through the hole to connect the grounding clamp to the frame.

First, peel the grounding cable to a proper length without damage to the metal core. Then insert the peeled cable into the plug of the wire lug and tighten the fastening screw. Connect the wire lug to the aluminum frame with stainless steel bolts and connectors, as shown in the right diagram below. The recommended tightening torque for the bolts is 2.3 N•m.

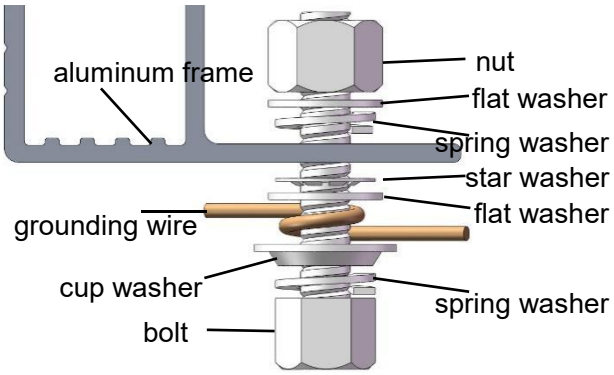

Grounding Hole installation

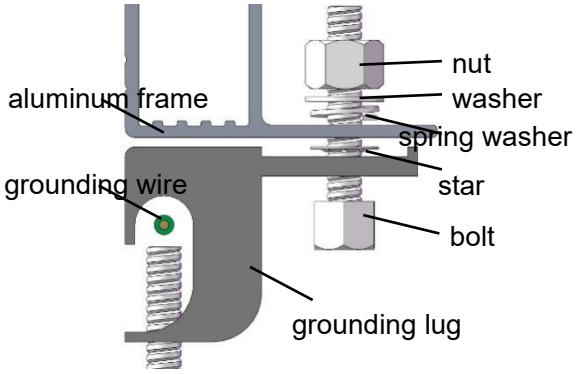

Grounding Clamp installation

Grounding Connection between Modules

The grounding holes of adjacent modules can be connected to each other by 4mm^2 copper core wires to complete the safe grounding between modules.

Connection Method	Parts	Illustration
Place the washer and ground wire in sequence, put the bolts through the grounding holes of adjacent modules, and tighten the bolts with nuts to fix the grounding wires. Then, the grounding of adjacent modules is done.	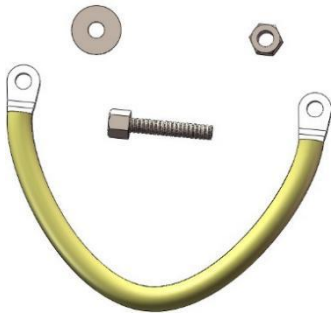	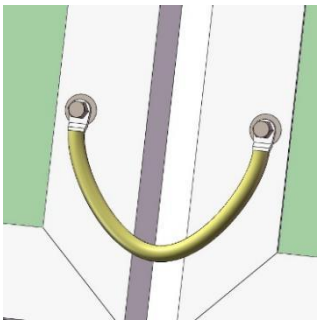

7 Maintenance

Normally, modules require periodic maintenance to ensure maximum service life and maximum power output. GCL SI advises the following maintenance measures for ensuring the optimum performance of modules.

Cleaning

Dust and other natural falling objects (such as birds' droppings) accumulated on the glass surface of modules could reduce the power output and lead to local hot spots. In normal cases, rainwater will clean the surface of the modules, which can reduce the frequency of cleaning. If necessary, use a wet and soft sponge or cloth to clean the glass surface. Do not use cleaning tools with rough surfaces. Please use a neutral anti-abrasion cleaner to remove difficult dirt. Do not use acid and alkaline and other corrosive detergents to clean modules.

Do not clean modules with perforated glass or back sheets, for such modules have a high risk of electrical shock. Conduct regular mechanical and electrical inspections to ensure that the module connectors are clean, reliable for connection, and free of damage and corrosion. The frequency of inspection is determined according to the actual situation of the project site, GCL SI suggests an inspection frequency of once every 6 months.

It is recommended to disconnect the circuit when repairing modules. Exposure of modules to sunlight could generate high voltage, so only professionals are allowed to repair the modules, and they must be careful.

Inspection

It is recommended to carry out periodic inspections of the modules, either by visual inspection of the module for external problems or by detailed electrical inspection with the circuit connection disconnected and under protection.

If the inverter shows that the busbar current is abnormally low, troubleshooting should be carried out as soon as possible.

Check whether the module is shaded and whether the structural system is loose.

Check if there is any damage to the modules, such as broken glass, burned back sheet, or aging connector, and if the grounding wire is connected well without problems like corrosion of accessories.

Replacement

If the damaged module must be replaced with the same type of module, do not touch the cable or the live part of the connector when replacing the module.

If the connector needs to be replaced, the maintenance staff must open the connector to see if the parts are intact. If not, the connector must be replaced. A damaged connector can easily lead to leakage. Pay attention to other safety precautions listed above in this manual.

8 Release and Execution

This document is centrally managed by the GCL SI R&D Department, and the final execution and interpretation fall into the responsibility of the R&D Department.

Appendix A

Clamps recommended by GCL SI		
No.	Drawing No.	Description
1	GCL/XXJC/2-RD-5096	35 mm side clamp for frames
2	GCL/XXJC/2-RD-5097	30 mm side clamp for frames
3	GCL/XXJC/2-RD-5519	33 mm side clamp for frames
4	GCL/XXJC/2-RD-5117	35/33/30 mm general-purpose middle clamp
5	GCL/XXJC/2-RD-5009	33 mm side anti-release clamp for frames
6	GCL/XXJC/2-RD-5010	general-purpose anti-release middle clamp
7	GCL/XXJC/2-RD-6576	30 mm side clamp for frames (the length of the A side is short)
8	GCL/XXJC/2-RD-6577	general-purpose middle clamp for frames (the length of the A side is short)

Revision History

Document Number: GCL-XXJC-2-RD-2317

Revision Date	Version	Revision Content	Revised by
2025.08.07	A0	First Edition Preparation	Xu Lianming
2026.05.20	A1	All information is updated to the latest version	Xu Lianming
2026.06.15	A2	Add description of applicable installation methods for the Modules with steel frame	Xu Lianming

Bringing Green Power to Life

GCL System Integration Technology Co., Ltd.
Address: 3F, GCL Energy Center, No. 28, Xinqing Road, Suzhou Industrial Park, Jiangsu Province
Tel: 86-512-6983-2860 (Customer Service Hotline)
Fax: 86-512-6983-2777
Email: GCLSIinfo@GCL SI.com